Eaton Water-Cooled Third Generation Brake Catalog

Airflex® Product Line

Powering Business Worldwide

Zastoupení pro Českou republiku: BMC-TECH www.bmc-tech.cz info@bmc-tech.cz | +420 545 226 047 pneumatické spojky

Table of Contents

Description 4
WCBD3 Component Parts 5
WCBD3 Dimensional Data 6
WCBD3 Technical Data 8
WCSB3 Component Parts 11
WCSB3 Dimensional Data 12
WCSB3 Technical Data 14

Water Cooled Third Generation Brake
Description

Eaton's water-cooled tensioning brakes achieve industry-leading, high-energy absorbing, dynamic braking. The revolutionary third generation brakes incorporate an improved internal design and increased water flow allowing for improved fluid dynamics with better energy dissipation characteristics. The third generation water cooled brake is available with Eaton's dual piston design (WCBD3) and with Eaton's air and water cooled combination style brake (WCSB3).

Features and Benefits

- Highest HP in class - 1000 HP per disc offers faster tripping time and the potential to downsize the brake in the same application
- More robust design for demanding applications eliminates copper cracking seen in competitive units
- Self supporting brake eliminates costly support brackets
- Higher coolant flow with 60% lower pressure drop
- Robust PTFE tape seal eliminates leakage
- Corrosion resistance standard on all WCSB3 and WCBD3 brakes
- Retrofits to existing WC brake mounting
- Easier maintenance and wear adjustments, no machining is required for friction or wear plates
- ABS/CDS agency approval

Applications

- Drawworks
- Mooring Winches
- Dynamometers
- Paper Mills
- Steel Service Centers

WCBD3 Description

The dual piston water cooled tensioning brakes allow precise control for severe, high energy or continuous slip applications while providing 50 percent more energy capability than Eaton's traditional WCBD. The patented dual piston provides a wide range of applied tension with greater control, allowing machine operators increased efficiency and reliability.

WCSB3 Description

Designed for dynamic tensioning, static holding and emergency stopping, these units eliminate the need for multiple braking systems, providing significant cost savings and system simplification.

WCBD3
Component Parts

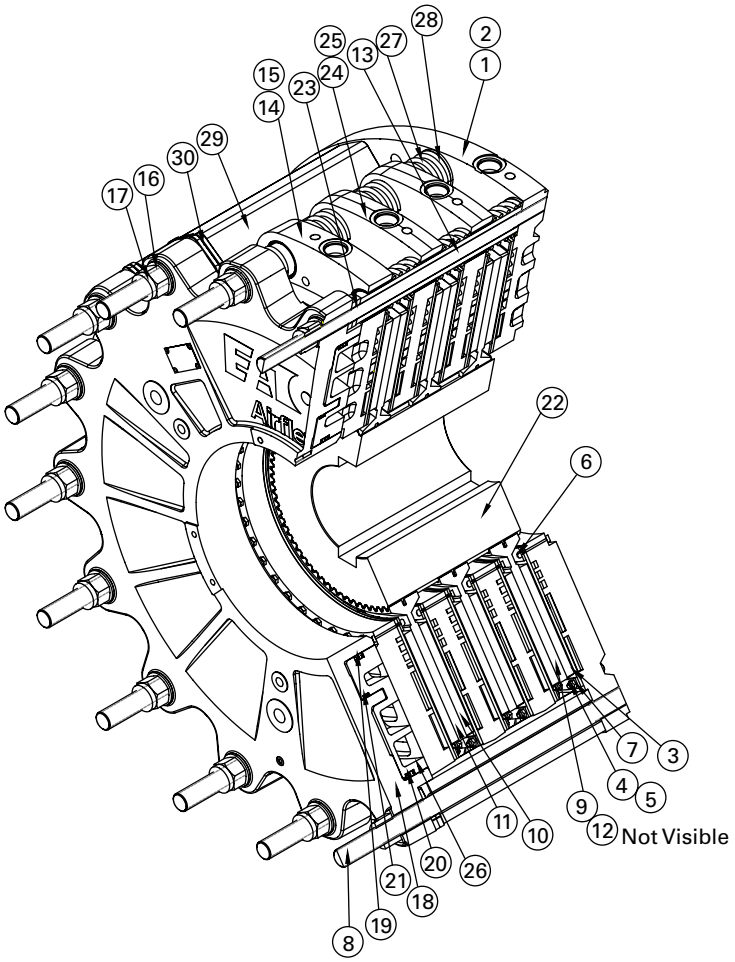

Item	Description
1	Mounting Flange Sub-Assembly
2	Mounting Flange
3	Wear Plate
4	Hex Head Screw
5	Locknut
6	Inner Support Ring
7	Outer Support Ring
8	Stud
9	Friction Disc Sub-Assembly
10	Friction Disc
11	Friction Disc Core
12	Flat Head Screw
13	Clamp Tube
14	Pressure Plate Sub-Assembly
15	Pressure Plate
16	Flat Washer

Item	Description
17	Lock Nut
18	Cylinder
19	Inner Seal
20	Outer Seal
21	Intermediate Seal
22	Gear
23	Clamp Tube Wear Spacer
24	Reaction Plate Sub-Assembly
25	Reaction Plate
26	Piston
27	Release Spring
28	Release Spring Spacer
29	Support Beam
30	Support Beam Wear Spacer

Note: Three disc unit shown. Other multi-disc units are similar. Items 23, 24, 25, 28 and 30 are not required for single disc units.

WCBD3 Elements
Dimensional Data

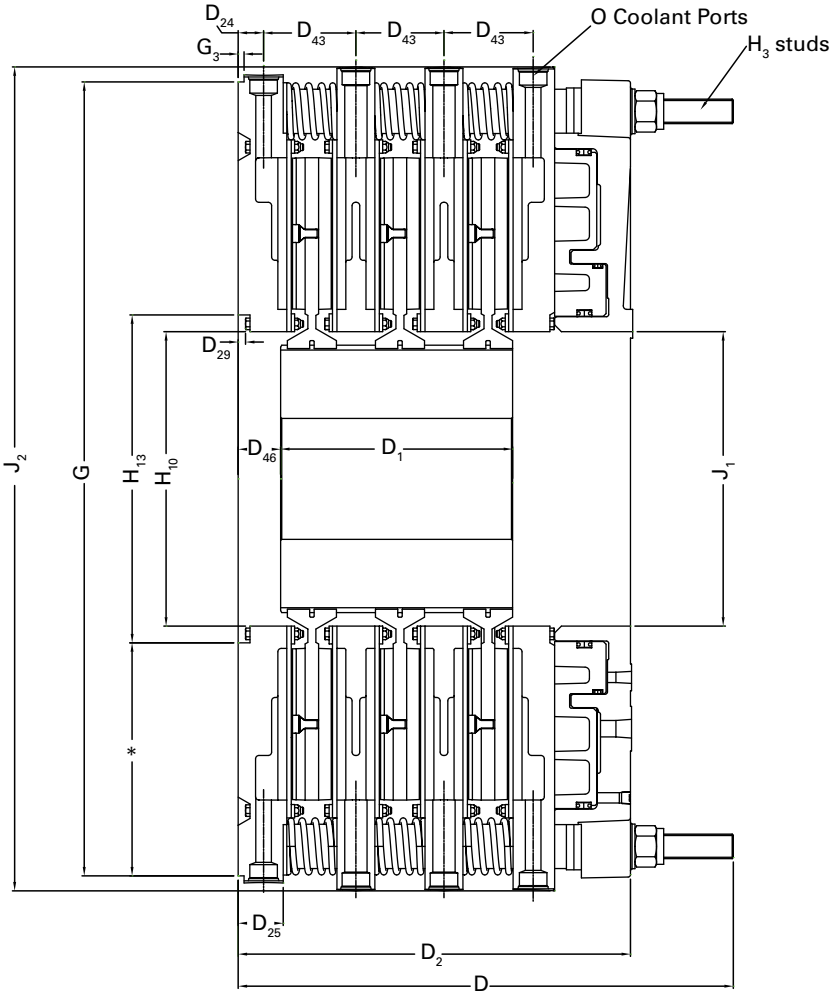

*Note: Customer's mounting plate must provide rigid support and contact for this length.

Mounting Bolt Circles ❶

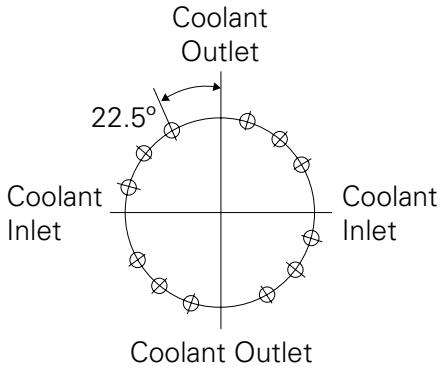

36WCBD3
12-1.062 (27,0) Dia. Holes based on 16 Equally Spaced Holes on a 42.000" (1066,8) BC

English	in							No.	Size	Bolt Circle - in	No.	Size	Bolt Circle - in	
136WCBD3 236WCBD3 336WCBD3 436WCBD3	1.43	2.53	0.38	5.17/ 4.94/ 5.00	2.38	44.498	0.33	16	1 3/8-6NC2	42.000	6	3/8-16NC2	17.500	16.50
Size	**D_{24}**	**D_{25}**	**D_{29}**	**D_{43} ⓯**	**D_{46}**	**G ❷**	**G_3**	**H_3 Studs**			**H_4 Aux Mount**			**H_{10}**
136WCBD3 236WCBD3 336WCBD3 436WCBD3	36.3	64.3	9.7	131.3/ 125.5/ 127	60.5	1130.25	8.38	16	1 3/8-6NC2	1066.80	6	3/8-16NC2	444.5	419.1
SI	**mm**							**No.**	**Size**	**Bolt Circle - mm**	**No.**	**Size**	**Bolt Circle - mm**	

Please refer to additional notes on pages 8 and 9.

WCBD3 Elements
Dimensional Data

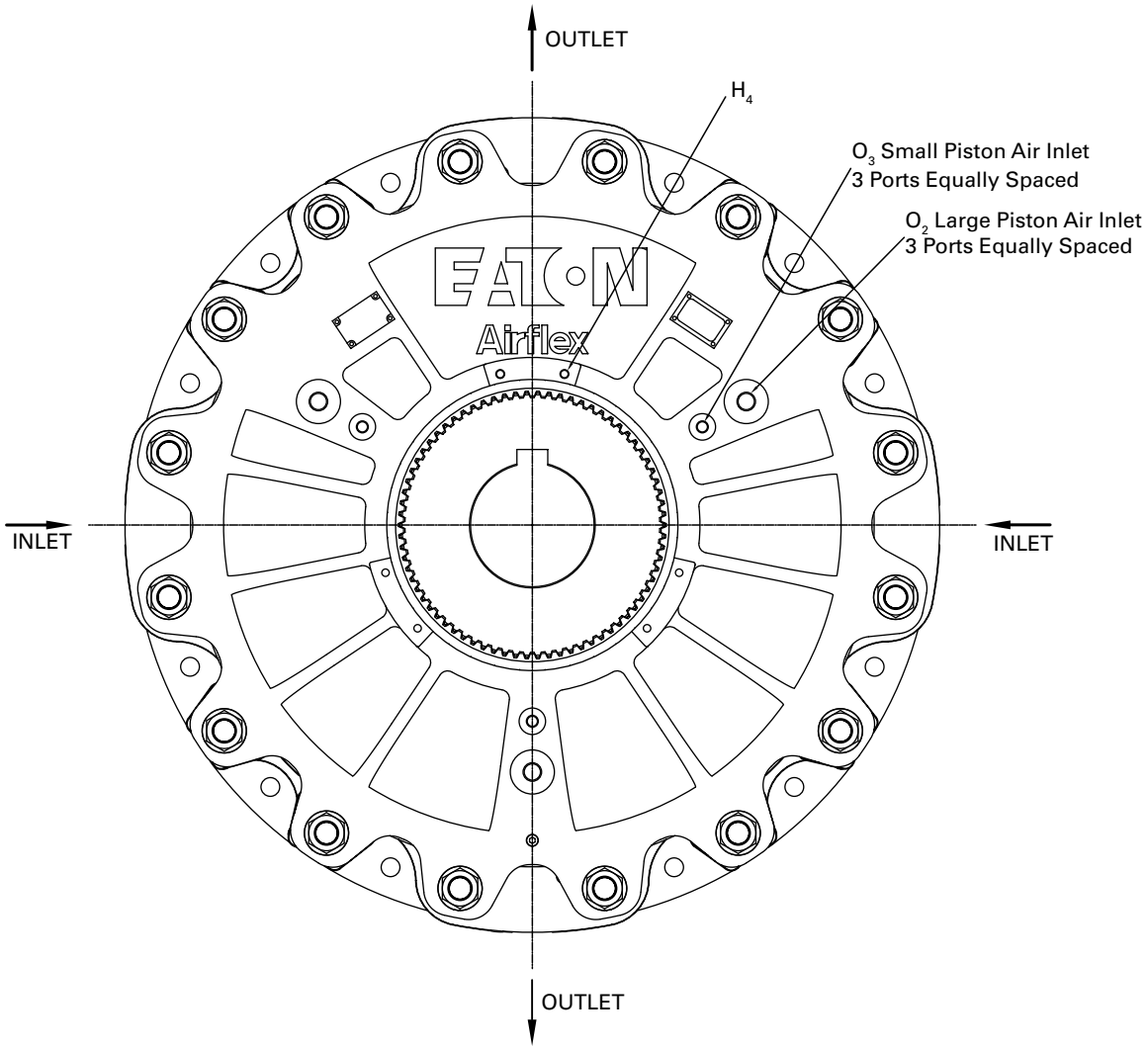

in			Size	Bolt Circle - in	Size	Bolt Circle - in	in			No.	Size	in.	
18.378	16.5	46.42	NPT 3/4-14	28.00	NPT 3/8-18	28.00	15.50	5.00	12.11	8	ORB SAE-20	5.63	10.63
							21.75	9.00	17.05	12	ORB SAE-20	7.62	10.75
							27.75	13.00	21.99	16	ORB SAE-20	7.25	10.88
							34.50	18.00	26.92	20	ORB SAE-20	8.00	10.88
H_{13} [3]	J_1	J_2 [5]	O_2 Large Piston Air Inlet Ports		O_2 Small Piston Air Inlet Ports		D	D_1	D_2	O Coolant Ports		Bore Range [4]	
												Min	Max
466.8	419.10	1179.1	NPT 3/4-14	711.2	NPT 3/8-14	711.2	393.7	127.0	307.6	8	ORB SAE-20	143	270
							552.5	228.6	433.1	12	ORB SAE-20	194	273
							704.9	330.2	558.5	16	ORB SAE-20	194	276
							876.3	457.2	683.8	20	ORB SAE-20	203	276
mm			Size	Bolt Circle - mm	Size	Bolt Circle - mm	mm			No.	Size	mm	

WCBD3 Elements
Technical Data

English				lb-in @ 80 PSI			hp	GPM	in³			
136WCBD3	146572AE	416538	417019	295000	223000	71000	1000	100	590	9.4E-04	2.9E-02	98
236WCBD3	146573AE	416536	417023	590000	446000	143000	2000	200	1180	2.4E-04	1.4E-02	196
336WCBD3	146574AE	416535	416435	885000	670000	214000	3000	300	1770	1.1E-04	9.3E-03	294
436WCBD3	146575AE	416537	416495	1180000	893000	286000	4000	400	2360	5.9E-05	7.2E-03	392
Size	**6 Part Number**	**Gear Part Number**	**CR Gear Part Number**	**Torque Rating 7**			**8 Thermal Rating**	**9 Water Flow**	**Water Volume**	**Pressure Drop Coefficient 14**		**New**
				Both Pistons	**Large Piston**	**Small Piston**				**C_1**	**C_2**	**Both**
136WCBD3	146572AE	416538	417019	33331	25196	8022	750	380	9.67	4.5E-06	5.3E-04	4.61
236WCBD3	146573AE	416536	417023	66661	50391	16157	1490	760	19.3	1.2E-06	2.6E-04	3.21
336WCBD3	146574AE	416535	416435	99992	75700	24179	2240	1140	29.0	5.3E-07	1.7E-04	4.82
436WCBD3	146575AE	416537	416495	133322	100895	32314	2980	1510	38.7	2.8E-07	1.3E-04	6.42
SI				**Nm @ 5,5 bar**			**kW**	**dm³/mn**	**dm³**			

Notes:

1. To ensure proper cooling, the inlet ports must be located at the 3 and 9 o'clock positions. The outlet ports must be located in the 12 and 6 o'clock positions.
2. Tolerance: 36WCBD3 +0.000/-0.005 in. (+0,00/-0,13 mm)
3. Tolerance: +0.003/-0.000 in. (0,08/-0,00 mm)
4. Maximum bore size are based on 2 flat keys, allowable gear hub stresses and torque ratings at 80 psi (5,5 bar).
5. Maximum diameter of "as cast" surfaces.
6. Basic part number only. Order gear separately.
7. Exact torque rating is dependant upon applied pressure. Maximum allowable pressure is 150 psi (10,3 bar).++
8. Based on a 70°F (21°C) fresh water inlet temperature and a maximum 50°F (28°C) rise between inlet and outlet. The maximum allowable outlet temperatures are 150°F (65°C) for fresh water: 165°F (74°C) for 70/30 and 60/40 water glycol mixes; and 170°F (77°C) for 50/50 water glycol mixes. See detailed cooling requirements in the WCB11080 IOM.
9. To insure proper cooling, inlet ports must be at the 3 + 9 o'clock positions and outlet ports must be at the 12 + 6 o'clock positions. Flow rates shown are for fresh water. Flow rates for water glycol mixes must increase to achieve the ratings in the Thermal Rating column. Maximum pressure allowable in the water cavity is 40 psi (40 psi inlet statically, 40 psi average dynamically). See detailed cooling requirements in the WCB11080 IOM.
10. Based upon a continuous slip velocity of 4500 fpm (22,9 mps).

++ Maximum allowable pressure for some larger units may be less due to 2.5×10^6 in-lbs torque limit.

WCBD3 Elements
Technical Data

in³					in³	RPM		lbs		in		lb ft²	
441	74	334	24	107	337	475	700	2330	427	6.2	4.4	4720	368
539	148	408	47	131	673	475	700	3070	819	8.8	6.7	6170	727
637	223	482	71	154	1009	475	700	3780	1210	11.3	9.0	7560	1090
734	297	556	95	178	1345	475	700	4530	1640	13.9	11.5	9060	1460
Worn	New	Worn	New	Worn	Lining Wear Volume	Max. Speed		Weight		Center ⓬ of Gravity		Inertia	
Applied Air (WC) Engaging Volume ⓭													
Pistons	Large Piston Only		Small Piston Only			⓪ Slip	Free-⓫ wheeling	Housing	Disc & Gear	Housing	Disc & Gear	Housing	Disc & Gear
7.23	1.21	5.47	0.39	1.75	5.5	475	700	1060	194	157	112	199	15.5
8.83	2.43	6.69	0.77	2.15	11.1	475	700	1390	371	224	170	260	30.6
10.44	3.66	7.9	1.16	2.52	16.6	475	700	1710	549	287	229	319	45.9
12.03	4.87	9.11	1.56	2.92	22.1	475	700	2050	744	353	292	382	61.5
dm³					dm³	RPM		kg		mm		kg m²	

Notes continued:

11. Maximum freewheeling velocity is 7500 fpm (38,1 mps).

12. Located from mounting flange surface.

13. Absolute volume of cylinder at contact with new and worn friction discs.

14. Pressure drop coefficient based on maximum pressure drop across brake.

    Pressure Drop = C_1 x Flow^2 + C_2 x Flow

15. Flexible connection must be used on ports. Dimension is nominal for the new, air off condition.

Notes

WCSB3
Component Parts

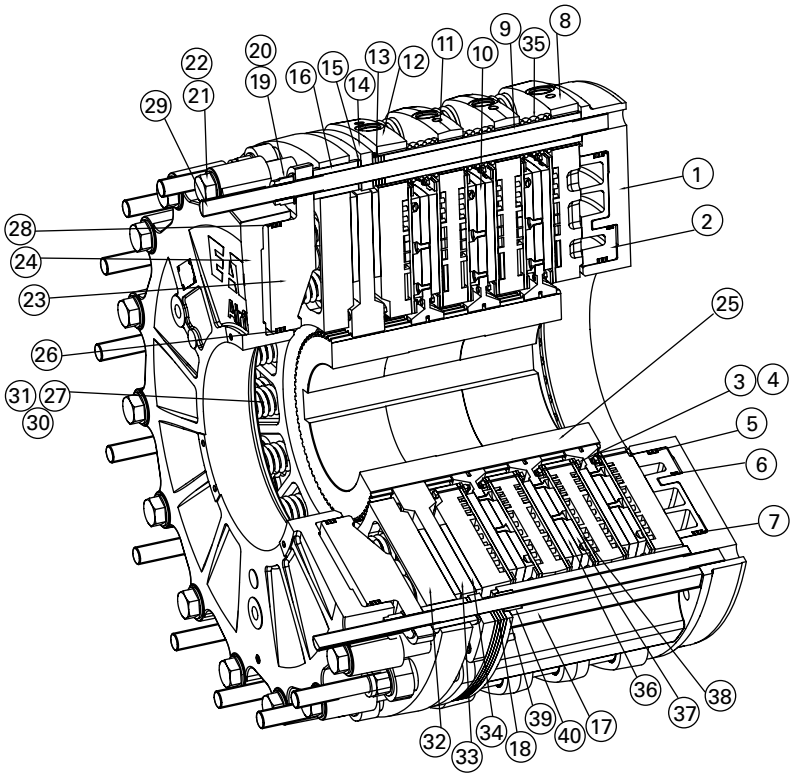

Item	Description
1	Mounting Flange/Cylinder
2	Air-Applied Piston
3	Hex Head Screw
4	Locknut
5	Air-Applied Inner Seal
6	Air-Applied Intermediate Seal
7	Air-Applied Outer Seal
8	Water-Cooled Pressure Plate
9	Clamp Tube
10	Water-Cooled Friction Disc Assembly
11	Reaction Plate
12	End Plate
13	Wear Spacers
14	Stop Plate
15	Wear Spacer
16	Clamp Tube
17	Support Beam
18	Wear Spacer
19	Self Locking Nut
20	Flat Washer
21	Hex Head Screw
22	Flat Washer
23	Spring Housing

Item	Description
24	Cylinder
25	Gear
26	Spring-Applied Inner Seal
27	Spring Retainer
28	Spring-Applied Outer Seal
29	Stud
30	Inner Spring
31	Outer Spring
32	Spring-Applied Pressure Plate
33	Air-Cooled Solid Disc
34	Air-Cooled Friction Disc
35	Release Spring
36	Water-Cooled Friction Disc Core
37	Water-Cooled Friction Disc
38	Wear Plate
39	Wear Spacer Retainer
40	Alignment Bushing

Note: The above cross-section shows a unit with 3 water-cooled friction disc assemblies. For units with one water-cooled friction disc assembly, item 11 is not required.

WCSB3 Elements
Dimensional Data

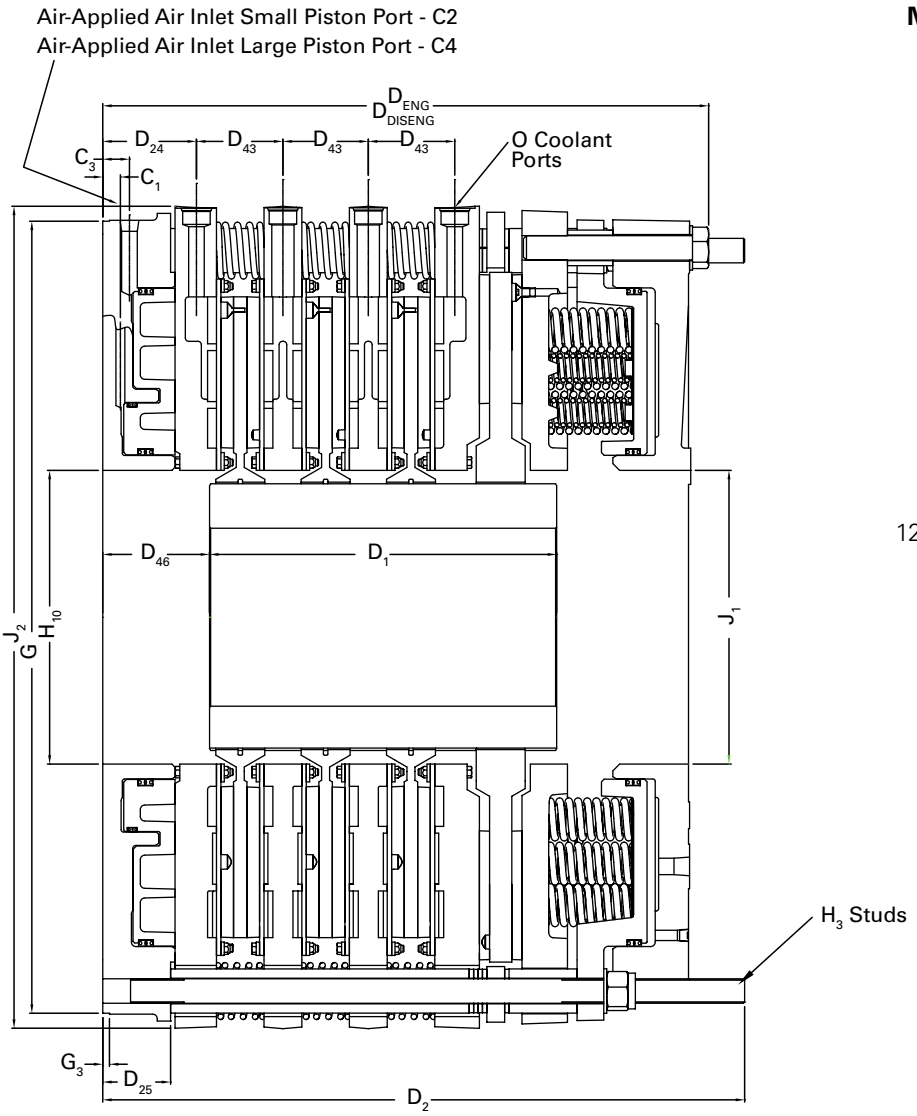

Mounting Bolt Circles ❽

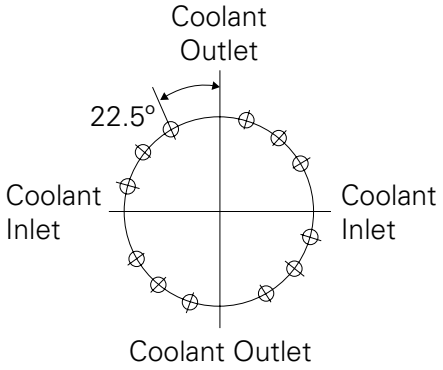

36WCSB
12-1.062 (27,0) Dia. Holes based on 16 Equally Spaced Holes on a 42.000" (1066,8) BC

English	in	Size	in	Size	in						No.	Size	Bolt Circle - in	No.
436WCSB3	0.99	NPT 3/8-18	1.50	NPT 3/4-14	5.24	3.81	4.86/4.80	6.00	44.498	0.38	16	1 3/8-6NC2	42.000	6
Size	**C_1**	**C_2**	**C_3**	**C_4**	**D_{24}**	**D_{25}**	**D_{43}** ⓮	**D_{46}** ⓭	**G** ⓬	**G_3**	**H_3 Studs**			
436WCSB3	25.1	NPT 3/8-18	38.1	NPT 3/4-14	133.1	96.8	123.4/121.9	152.4	1130.20	9.7	16	1 3/8-6NC2	1066.80	6
SI	**mm**	**Size**	**mm**	**Size**	**mm**						**No.**	**Size**	**Bolt Circle - mm**	**No.**

Please refer to additional notes on pages 14 and 15.

WCSB3 Elements
Dimensional Data

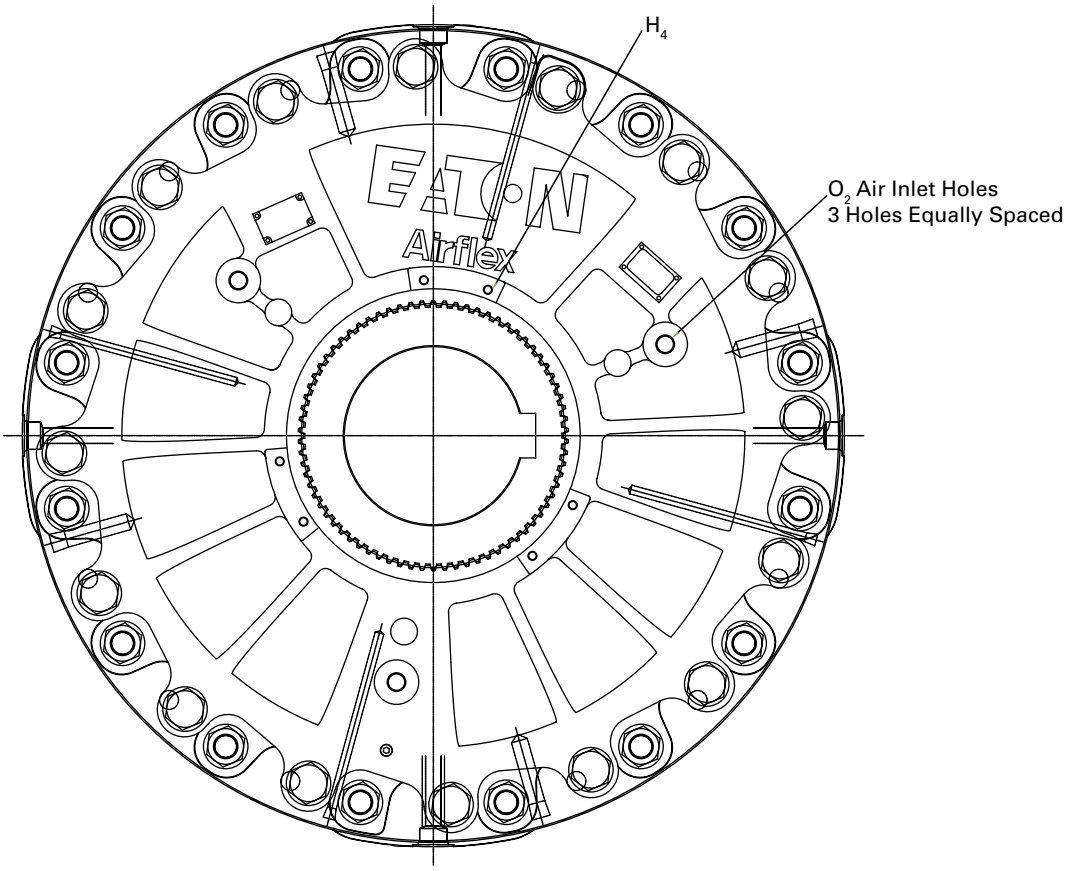

Size	Bolt Circle - in	in			Size	Bolt Circle - in	in				No.	Size	In	
3/8-16NC2	17.500	16.50	16.50	46.42	NPT 3/4-14	28.000	19.50	36.06	34.58	34.04	16	ORB SAE-20	11.250	11.375
H_4 Aux Mount		**H_{10}**	**J_1**	**J_2**	**O2 Air Inlet Ports**		**D_1**	**D_2**	**D_{Eng}**	**D_{Diseng}**	**O Coolant Ports**		**Min Bore Range**	**Max Bore Range**
3/8-16NC2	444.5	419.1	419.1	1179.1	NPT 3/4-14	711.2	495.3	915.9	878.3	864.6	16	ORB SAE-20	285.8	288.9
Size	**Bolt Circle - mm**	**mm**			**Size**	**Bolt Circle - mm**	**mm**				**No.**	**Size**	**mm**	

WCSB3 Elements
Technical Data

English			lb-in @ 80 PSI			lb-in	lb-in	lb-in	hp	PSI			GPM
436WCSB3	146576AE	417099	1389000	1055640	333360	1969000	2107000	2514000	3000	7	8	20	300
Size	**❶ Part Number**	**CR Gear Part Number**	**Air Applied (WC) ❸ Dynamic Torque Rating**			**❷ Spring Applied (WC+AC) Dynamic**	**❷ Spring Applied (WC+AC) Static**	**❺ Maximum (WC+AC) Dynamic Torque**	**❹ WC Thermal Rating**	**Parasitic Pressure (WC)**			**❽ Water Flow**
			Both Pistons	**Large Piston**	**Small Piston**					**Both Pistons**	**Large Piston**	**Small Piston**	
436WCSB3	146576AE	417099	156818	119182	37636	222300	237880	283831	2240	0.48	0.55	1.38	1140
SI			**Nm @ 5,5 bar**			**Nm**	**Nm**	**Nm**	**kW**	**bar**			**dm^3/min**

Notes:

1. Basic part number only. Gear must be ordered separately.

2. Torque is based on a spring set release pressure of 120 psi and the maximum amount of apply springs. To decrease release pressure, springs can be removed. The maximum number of springs follows: 36WCSB3 - 128 (64 outer Springs and 64 inner springs).

3. Exact torque rating is dependent upon applied pressure. Maximum allowable air-applied pressure is 150 psi. Torque limit qualifier 2.5×10^6 in-lb.

4. Based upon a 70°F (21°C) fresh water inlet temperature and a 50°F (28°C) temperature rise between inlet and outlet. See cooling requirements.

5. Maximum torque results when 120 psi is applied to the air-applied side and the spring-applied side is fully set simultaneously. If air pressure is lost, the torque will drop to the spring-applied static torque.

6. Absolute volume of cylinder at contact with new and worn friction discs. Worn volume assumes one wear spacer thickness of wear.

7. Coefficients are based on the maximum pressure drop across the individual water cavities of the brake.

$$\text{Pressure Drop} = C_1 \times \text{Flow}^2 + C_2 \times \text{Flow}$$

WCSB3 Elements
Technical Data

in³			in³	RPM		in³						lbs		in		lb ft²	
1770	1.1E-04	9.3E-03	1009	475	700	294	637	223	482	71	154	6195	1590	16.6	15.9	12750	1620
Water Volume	Pressure Drop Coefficient ❼		WC Lining Wear Volume	Max. Speed		New	Worn	New	Worn	New	Worn	Weight		Center of Gravity ❾		Inertia	
	C_1	C_2		❿ Slip	⓫ Free-wheeling	Applied Air (WC) Engaging Volume ❻						Housing	Disc & Gear	Housing	Disc & Gear	Housing	Disc & Gear
						Both Pistons		Large Piston Only		Small Piston Only							
29	5.3E-07	1.7E-04	16.6	475	700	4.82	10.44	3.66	7.9	1.16	2.52	2810	721	422	404	537.3	68.3
dm³			dm³	RPM		dm³						kg		mm		kg m²	

Notes continued:

8. To insure proper cooling, the inlet port must be at the 3+9 o'clock positions and the outlet ports must be at the 12+6 o'clock positions.

9. Located from the mounting flange surface.

10. Based upon a continuous slip velocity of 4500 fpm (22,9 mps).

11. Maximum freewheeling velocity is 7500 fpm (38,1 mps).

12. Tolerance for the 36WCSB3 is +0.000/-0.005 in. (+0,00/-0,13 mm).

13. Tolerance ±0.030 in. (±0,76 mm).

14. Flexible connection must be used on ports. Dimension is nominal for new spring applied condition.

Data shown is subject to change.
Please consult factory for current dimensional data.

Eaton
Hydraulics Group USA
14615 Lone Oak Road
Eden Prairie, MN 55344
USA
Tel: 952-937-9800
Fax: 952-294-7722
www.eaton.com/hydraulics

Eaton
Airflex
9199 Clinton Road
Cleveland, OH 44144-1077
USA
Tel: 216-281-2211
Fax: 216-281-3890

Eaton
Eaton Industrial Clutches & Brakes
Shanghai Co., Ltd.
No. 281 Fa Sai Road
WaiGaoQiao Free Trade Zone
Shanghai 200131, China
Main: 011-86 21-50484811
Fax: 011-86 21-50484911

Powering Business Worldwide

© 2013 Eaton
All Rights Reserved
Printed in USA
Document No. E-CLCL-CC003-E
Supercedes A-157
December 2013

Zastoupení pro Českou republiku: BMC-TECH www.bmc-tech.cz info@bmc-tech.cz | +420 545 226 047 pneumatické spojky